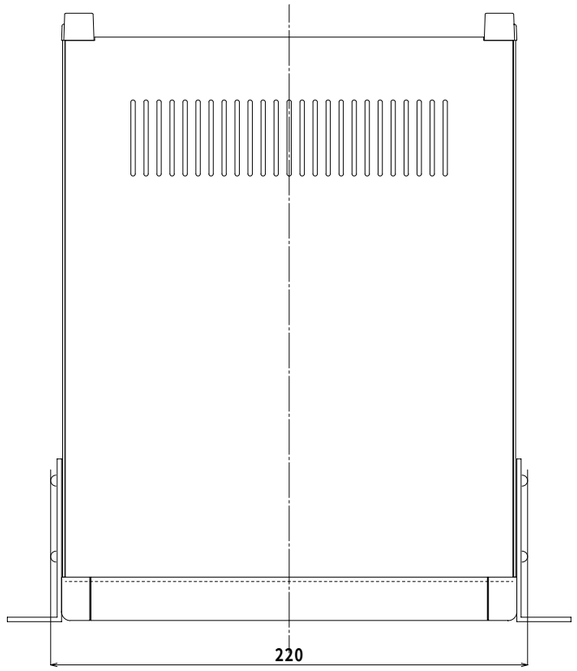


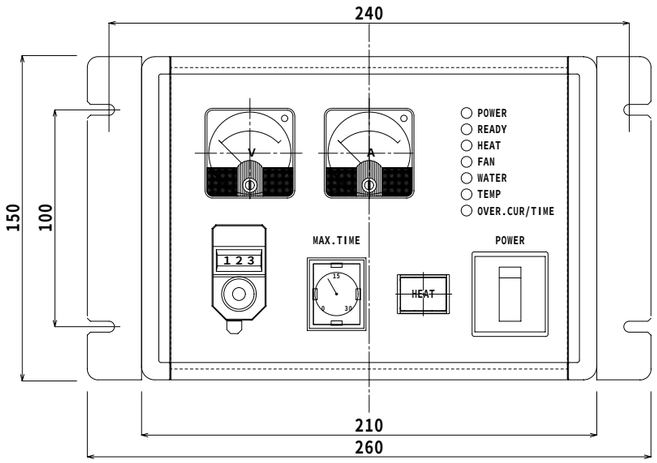


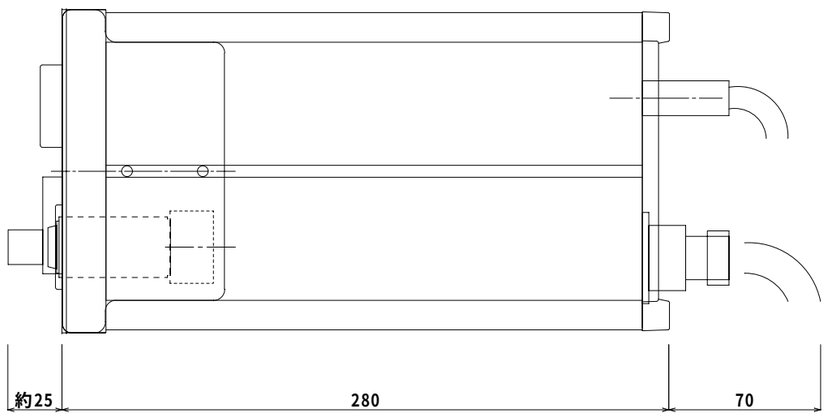


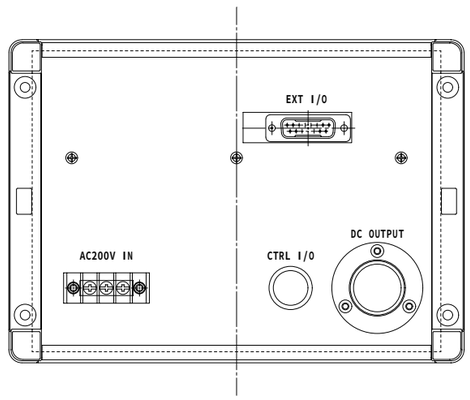


| | | | | | | | | | | | | | | | |
|---|---|---|---|---|---|---|---|---|---|---|---|---|---|---|---|
| △ | | | | 承　認 APPROVED BY | | | 検　図 CHECKED BY | | | 図面サイズ DWG.SIZE | ③ | 機　種 MODEL | ＰＳ０１２Ｍ (ＩＨ０１２Ｍ電源部) | 名　称 NAME | 外観図（案） |
| △ | | | | | | | | | | | | | | | |
| △ | | | | 検　認 INSPECTED BY | | | 設　計 DESIGNED BY | A.Nakagomi | 2005.09.05 | 枚　図 SHEETS | 1／1 | 形　式 TYPE | | 図　番 DWG.NO. | |
| △ | | | | 照　査 COLLATED BY | | | 製　図 DRAWN BY | A.Nakagomi | 2005.09.05 | 尺　度 SCALE | ／ | ワイエス電子工業株式会社 | | YS−DENSHI | |
| NO. | 日　付 DATE | 訂　正　事　項 DESCRIPTION OF REVISIONS | 署　名 SIGN | | | | | | | | | | | | |